SEW NEWS
The Trusted Sewing Source
ESTABLISHED IN 1980

PUMPED UP PONCHO PATTERN

©2016 F+W Media, Inc.

Pumped Up Poncho

BY ADDIE MARTINDALE

Stitch a snuggly poncho using sweatshirt fleece to slip on after a workout or when out and about on a cool morning. The pocket provides a cozy place to keep your hands while the front slits make it easy to go about your day-to-day business.

ATHLETE CHIC

The athleisure look, designed to transition seamlessly from the gym to the street, is still going strong. Unique and stylish variations of standard sportswear are all the rage this spring. Jump on the trend with this take on the traditional sweatshirt. Add a touch of color and personality by choosing a brightly-printed sport knit for the cowl collar, or go for a more cozy feel with a coordinating sweater knit. Perfect for layering, pair this poncho with your favorite handmade leggings, and you're ready for the gym. Or slip it on over a long-sleeved shirt, a pair of jeans, and knee-high boots and take to the town.

SIZE CHART

	S	M	L	XL
Bust Measurement	32"-34"	36"-38"	38"-40"	40"-42"
Finished length at CB	21½"	22"	22½"	23"
Finished shoulder seam from neck to hem	20"	21½"	22"	22½"

Skill Level: Easy

SUPPLIES

- **1½ yards of sweatshirt fleece, fleece or sweater knit fabric**
- **⅜ yard of lightweight coordinating spandex or Lycra sport knit**
- **Coordinating all-purpose thread**

PREPARE

Download the Pumped Up Poncho Pattern from sewnews.com/web_extras for free until May 31, 2017. Purchase the pattern at shopsewitall.com after the expiration date.

From the fleece fabric, cut four poncho sides, one poncho front on the fold, one poncho back on the fold and one front pocket.

From the sport knit fabric, cut one collar on the fold.

Transfer all pattern markings.

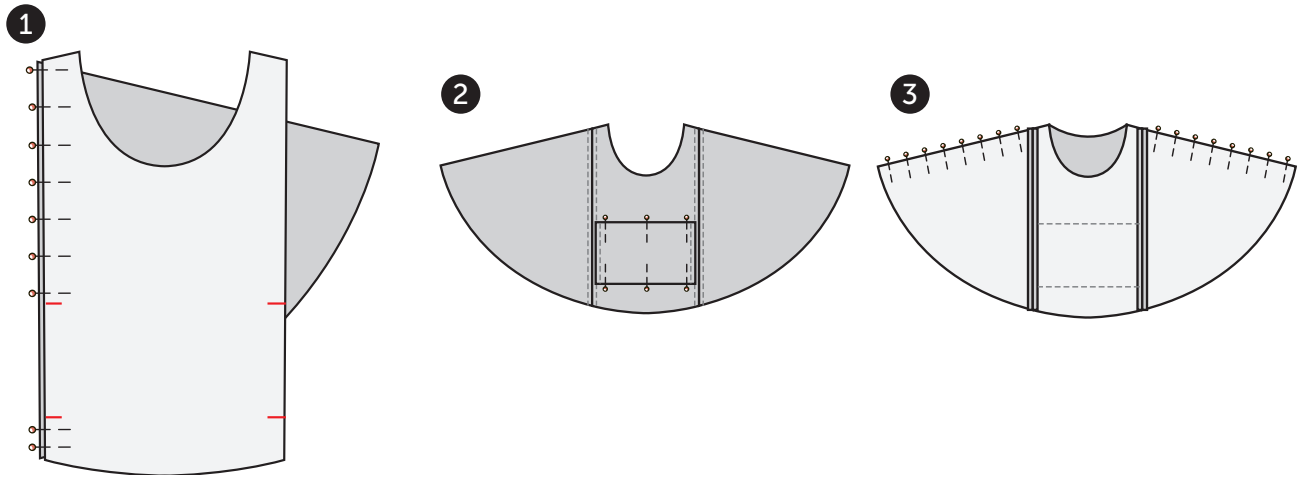

CONSTRUCT

Align one poncho side with the poncho front along the long straight edge with right sides together; pin. Stitch the seam, leaving the space between the marks open **(1).** Press the seam open.

Topstitch along both sides of the seam, including the arm openings, catching the seam allowances in the stitching.

Repeat to attach a second poncho side piece to the opposite front edge.

Fold the pocket long edges ½" toward the wrong side; press if desired and pin in place.

Fold the pocket short edges ½" toward the wrong side; press if desired, pin and then topstitch.

Place the pocket on the poncho front right side, with the right side up and the top corners aligned with the pocket markings; pin **(2)**.

Topstitch along the top and bottom of the pocket.

Align one poncho side with one poncho back long straight edge; pin. Stitch; press the seams open. Repeat to stitch the remaining poncho side to the poncho back.

Pin the front to the back at the side seams with right sides together. Stitch; press open the seams **(3)**.

Fold the collar in half widthwise with right sides together. Stitch the short ends to create a loop; press open.

Fold the collar loop in half lengthwise with wrong sides together; press. Designate one side of the collar as the right side.

Align the collar with the poncho neckline with right sides together and aligning the raw edges. Match the collar seamline to the notches at the poncho center back.

Stitch the collar to the poncho neckline.

Turn the hem ½" toward the right side. Press, and then pin if necessary. Stitch. Ⓢ

2″ Test Square

1/2″ seam allowance included.

Pumped Up Poncho ePattern Layout
20 pages: 1a-1g, 2a-2g, 3a-3f
Print this page first at 100%,
then measure test square before
printing full pattern

© 2017 F+W Media, Inc.

1a

SEW NEWS

The Trusted Sewing Source
ESTABLISHED IN 1980

Po
Front
cu

A

© 2016 F+W Media, Inc.

1b

Poncho
nt Pocket
cut 1

All sizes

1c

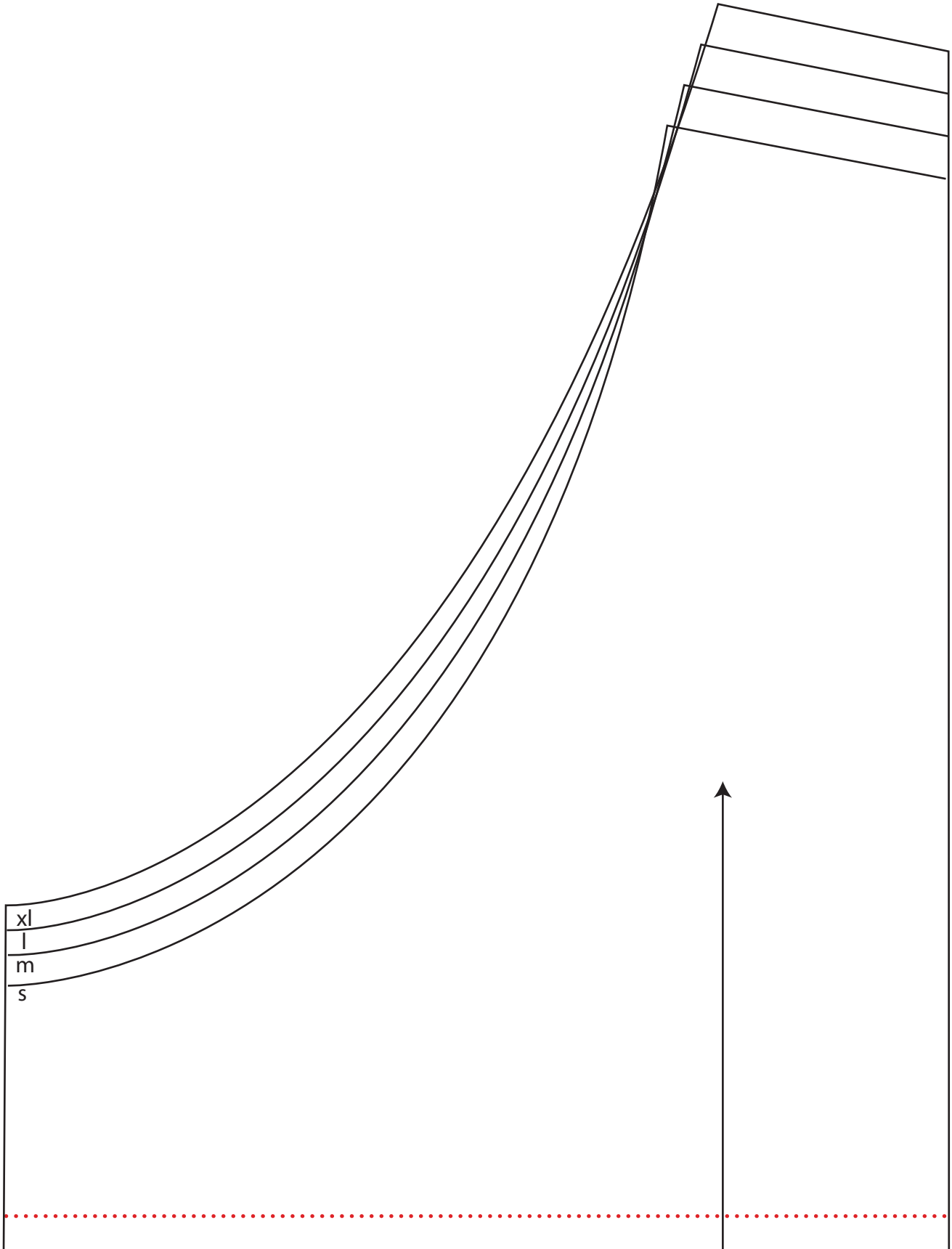

1d

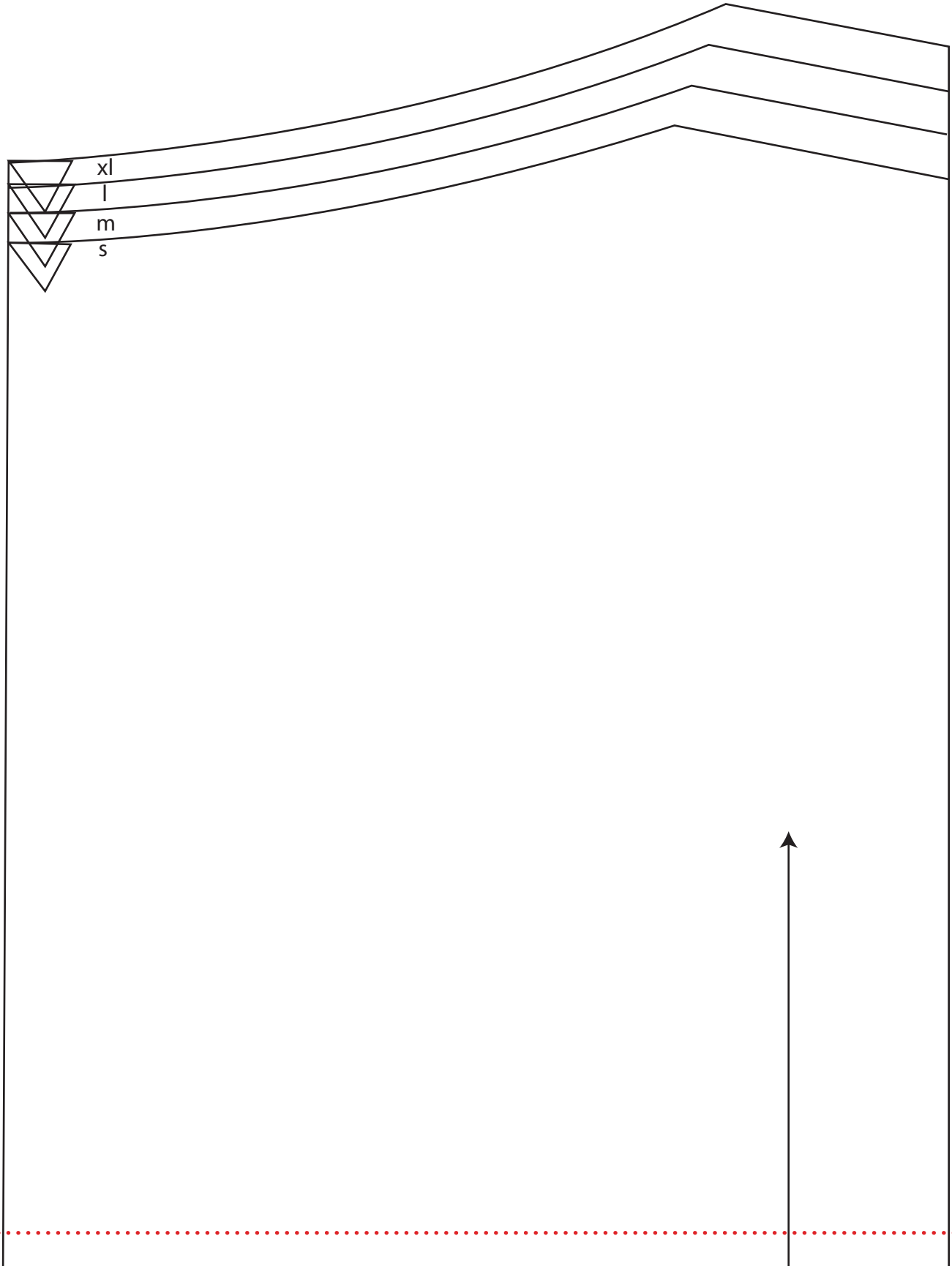

1e

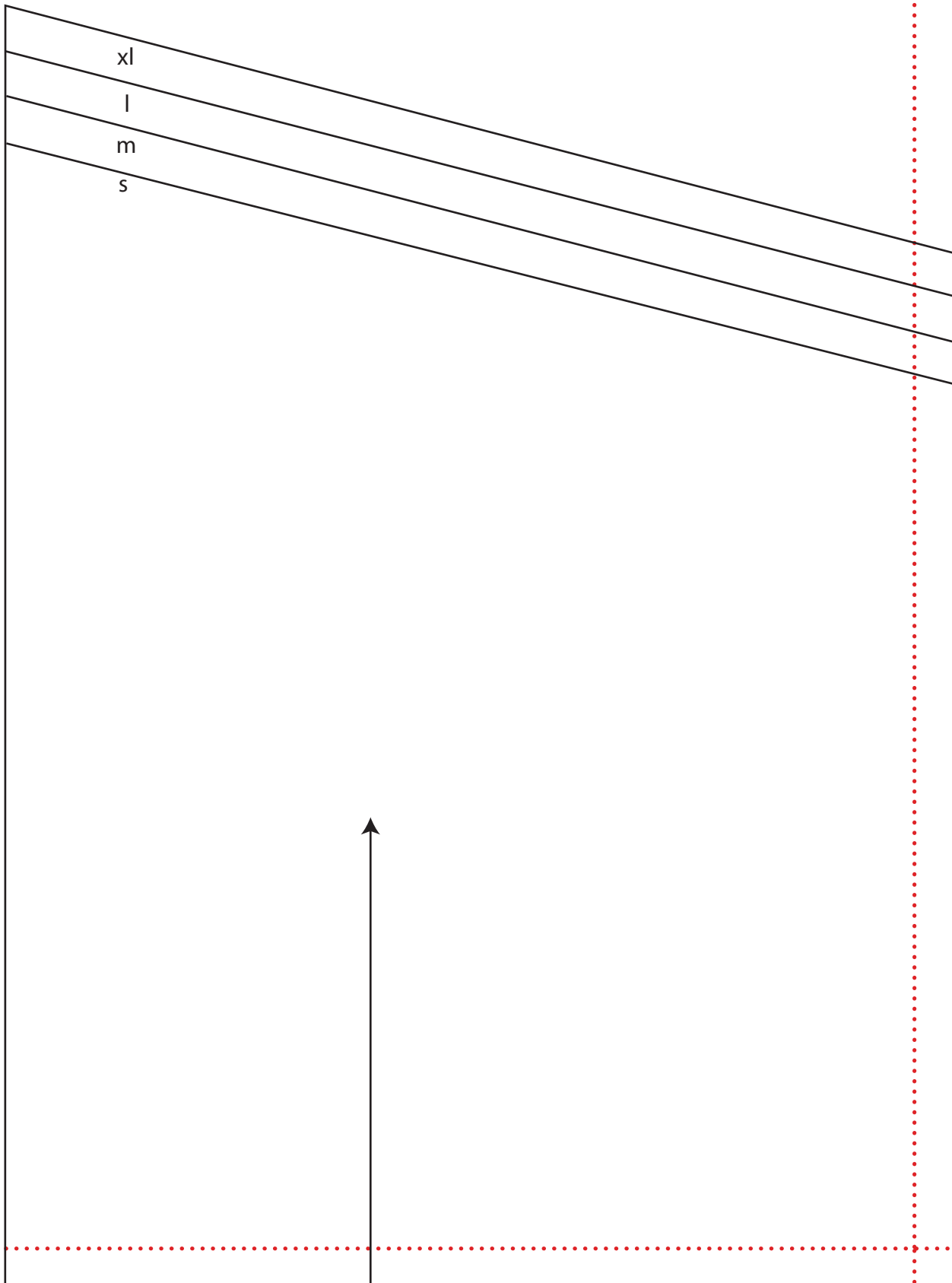

1f

Side

1g

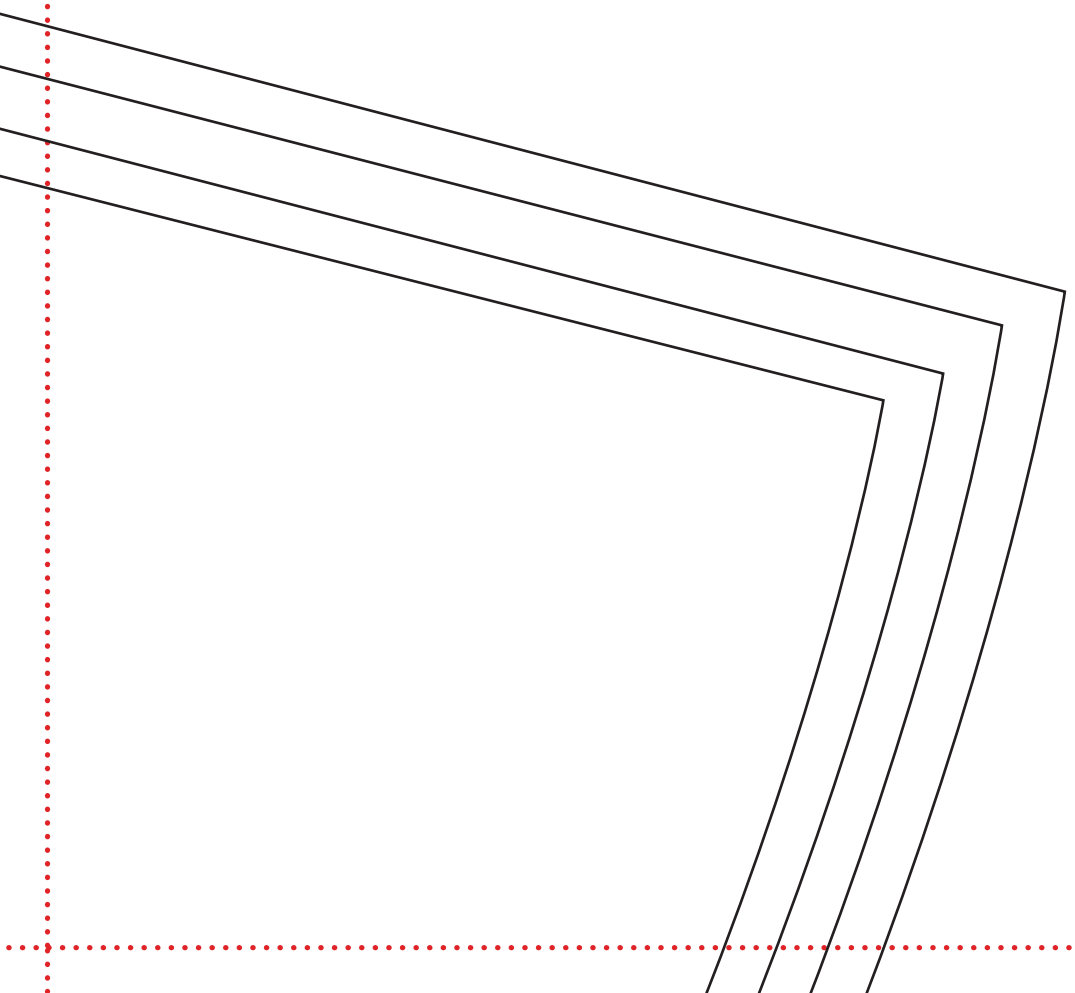

2a

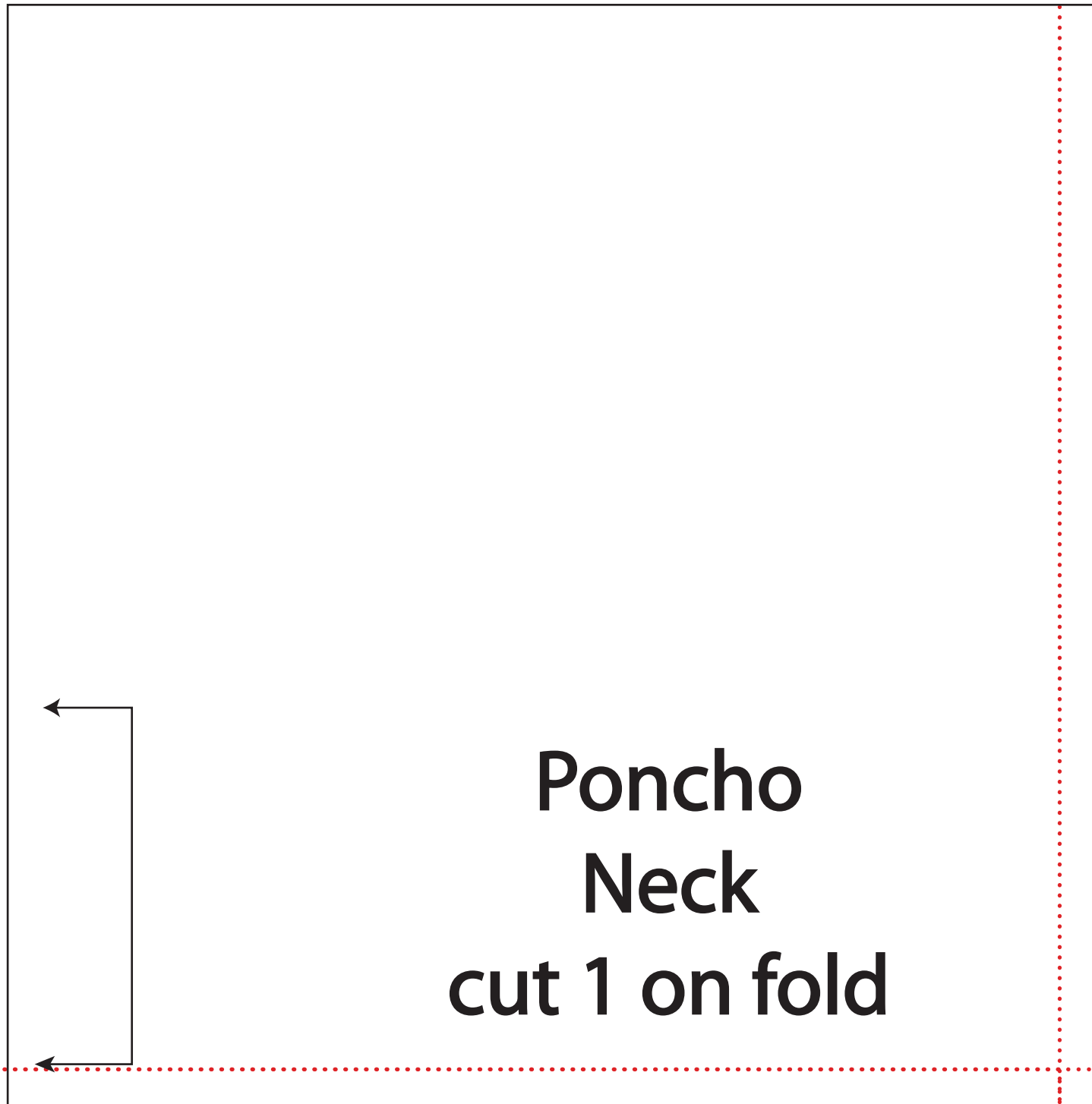

Poncho
Neck
cut 1 on fold

2b

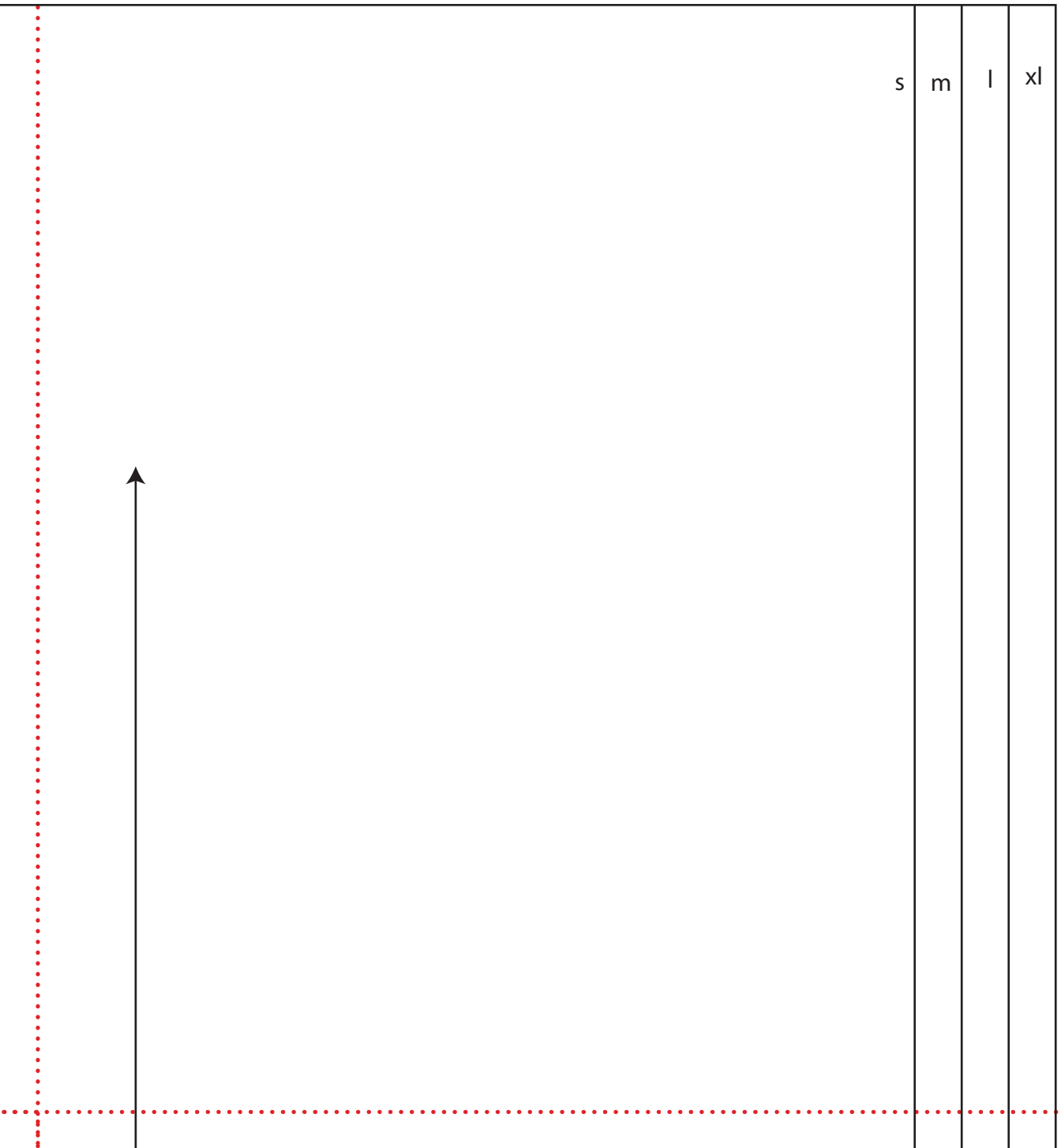

2c

Front
Poncho
cut 1 on fold

pocket
placement

ing: Do not sew between lines

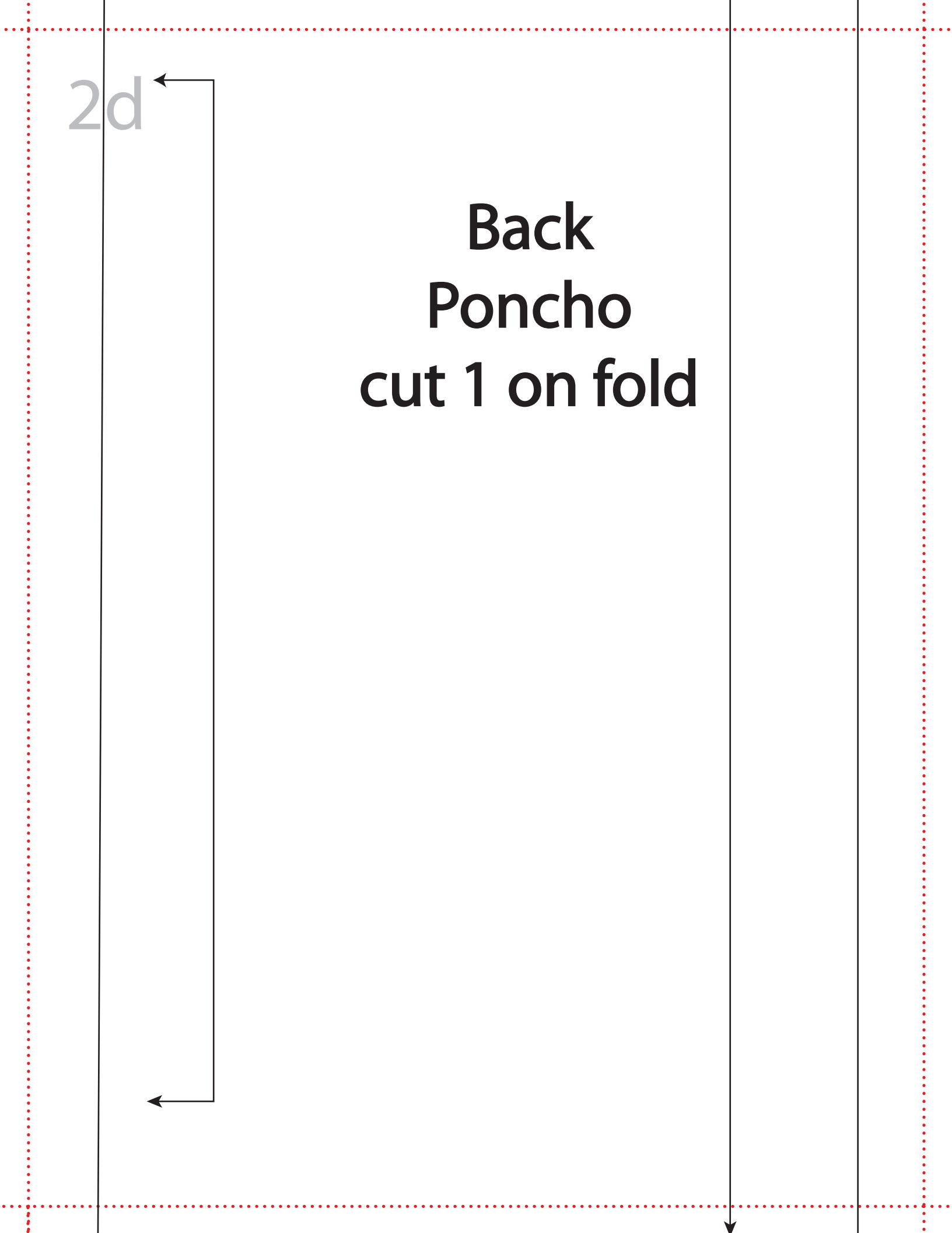
2d
Back
Poncho
cut 1 on fold

2e

Poncho
2f
cut 4

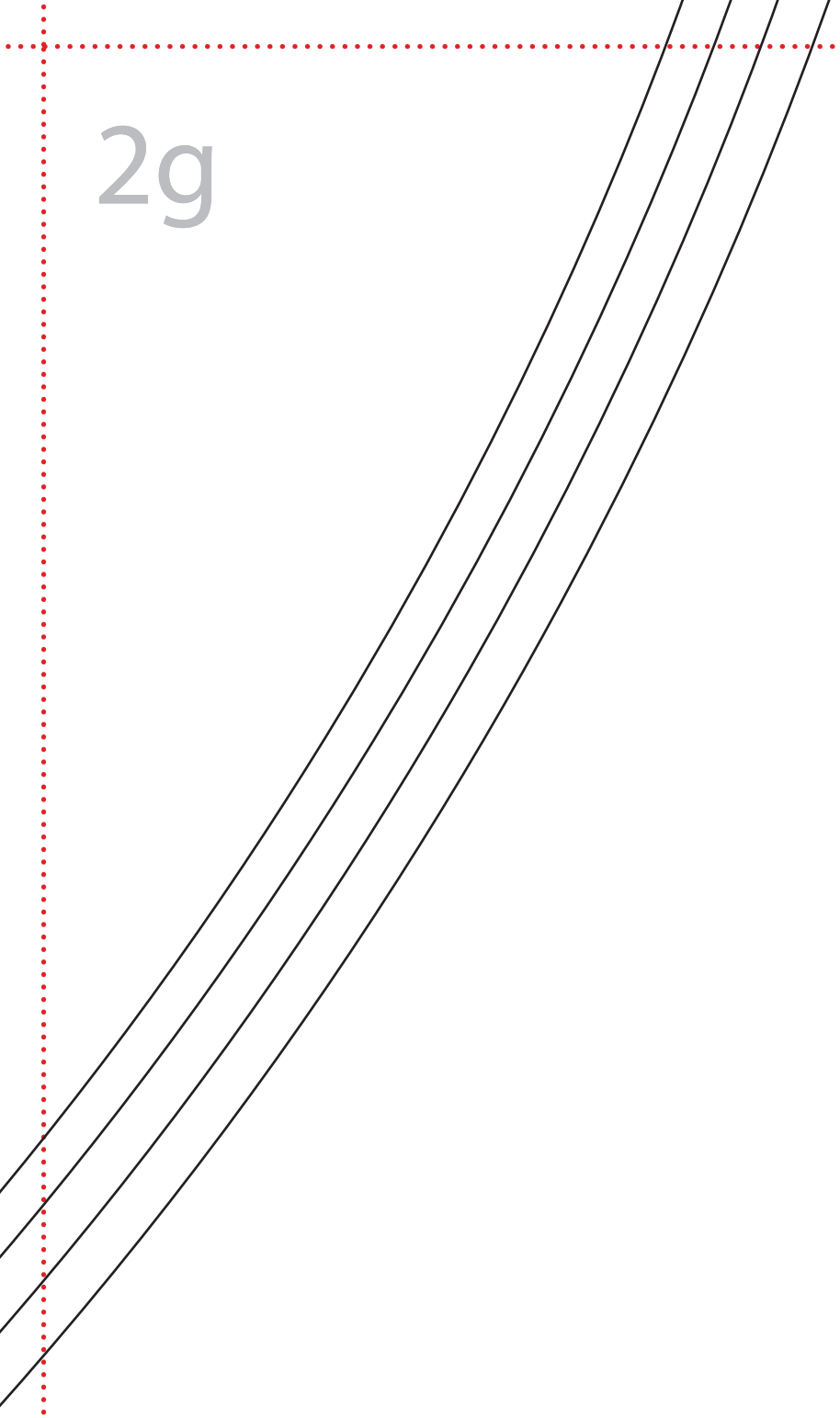

2g

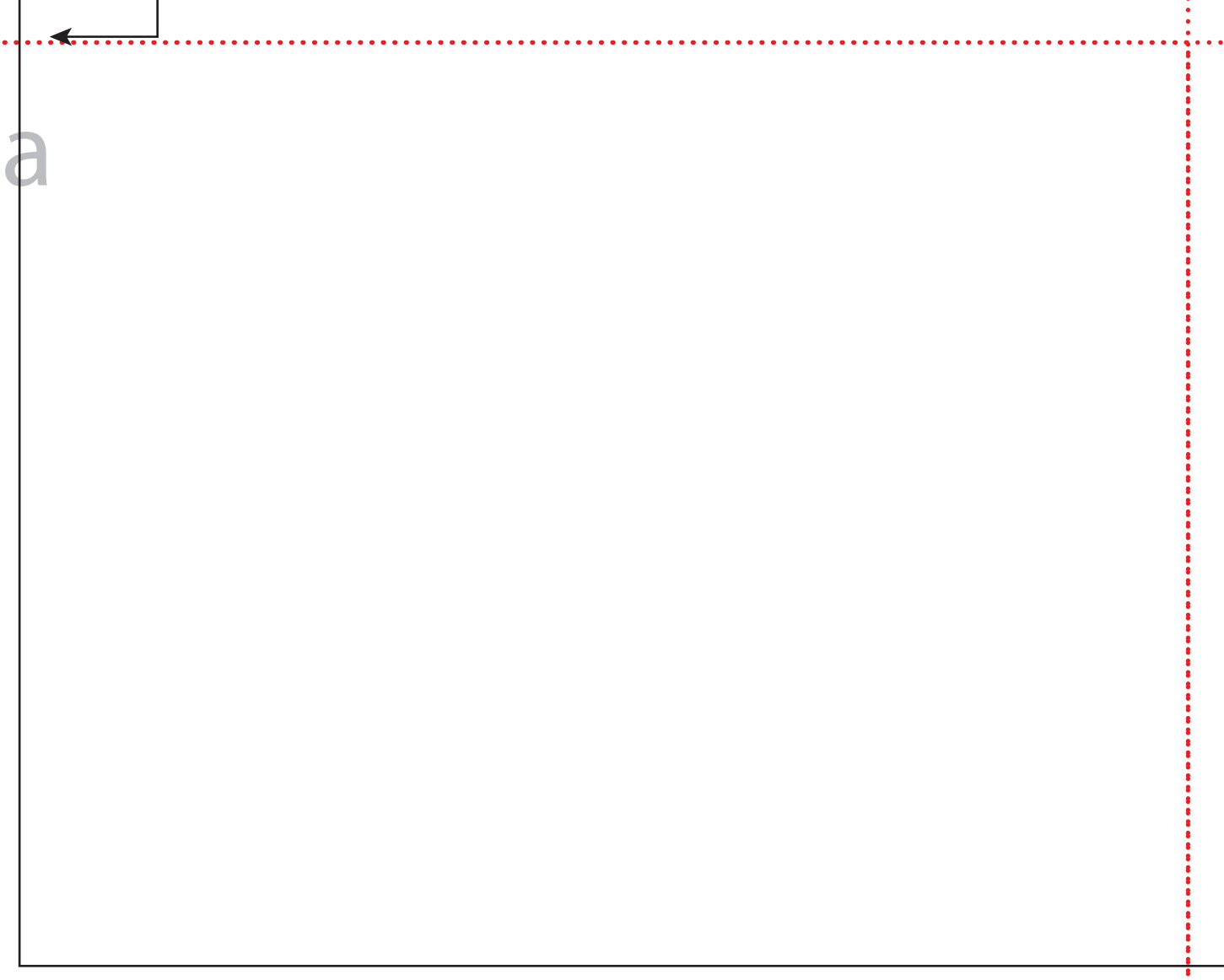

3a

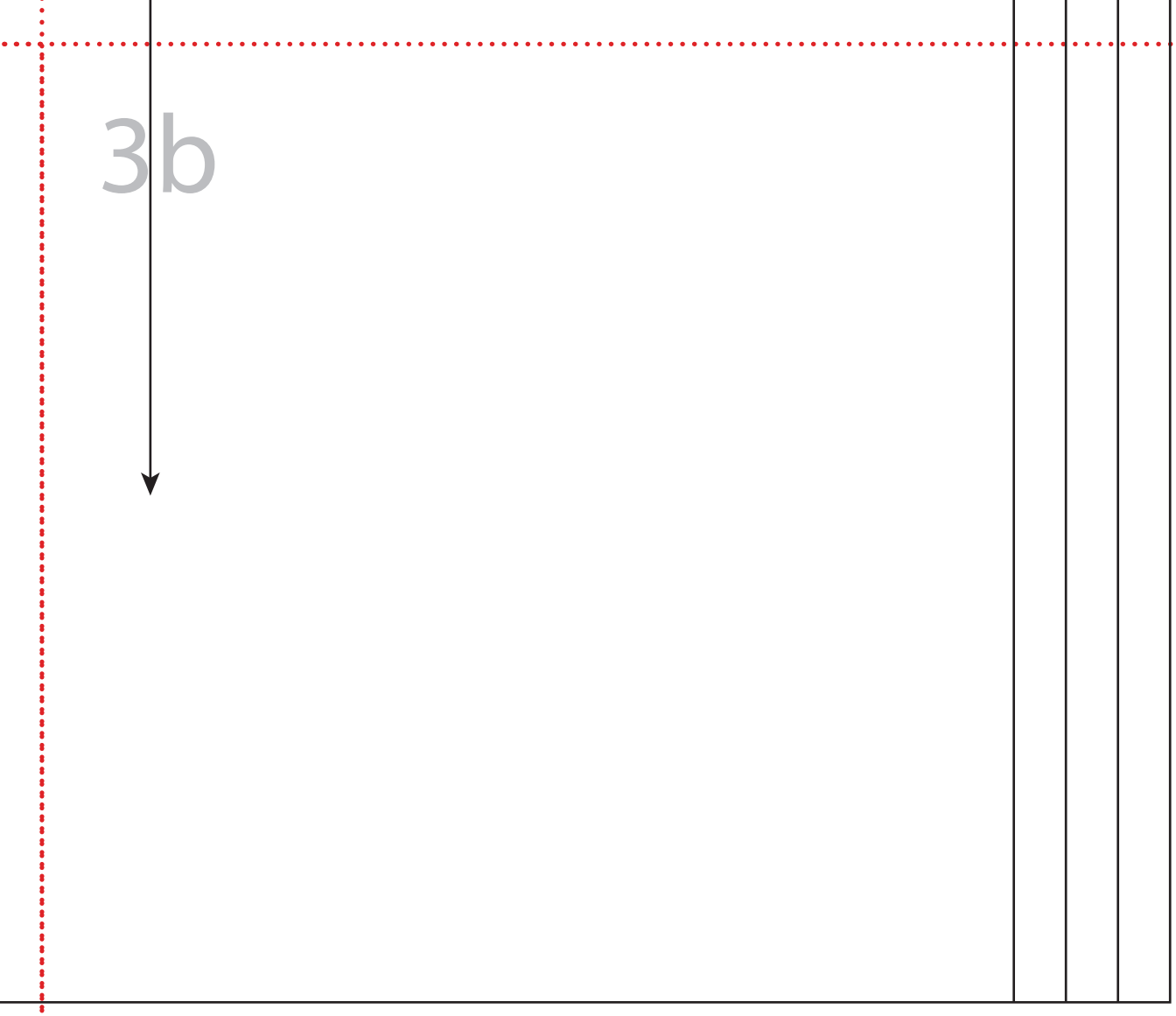
3b

3c

Hand opening:

3d

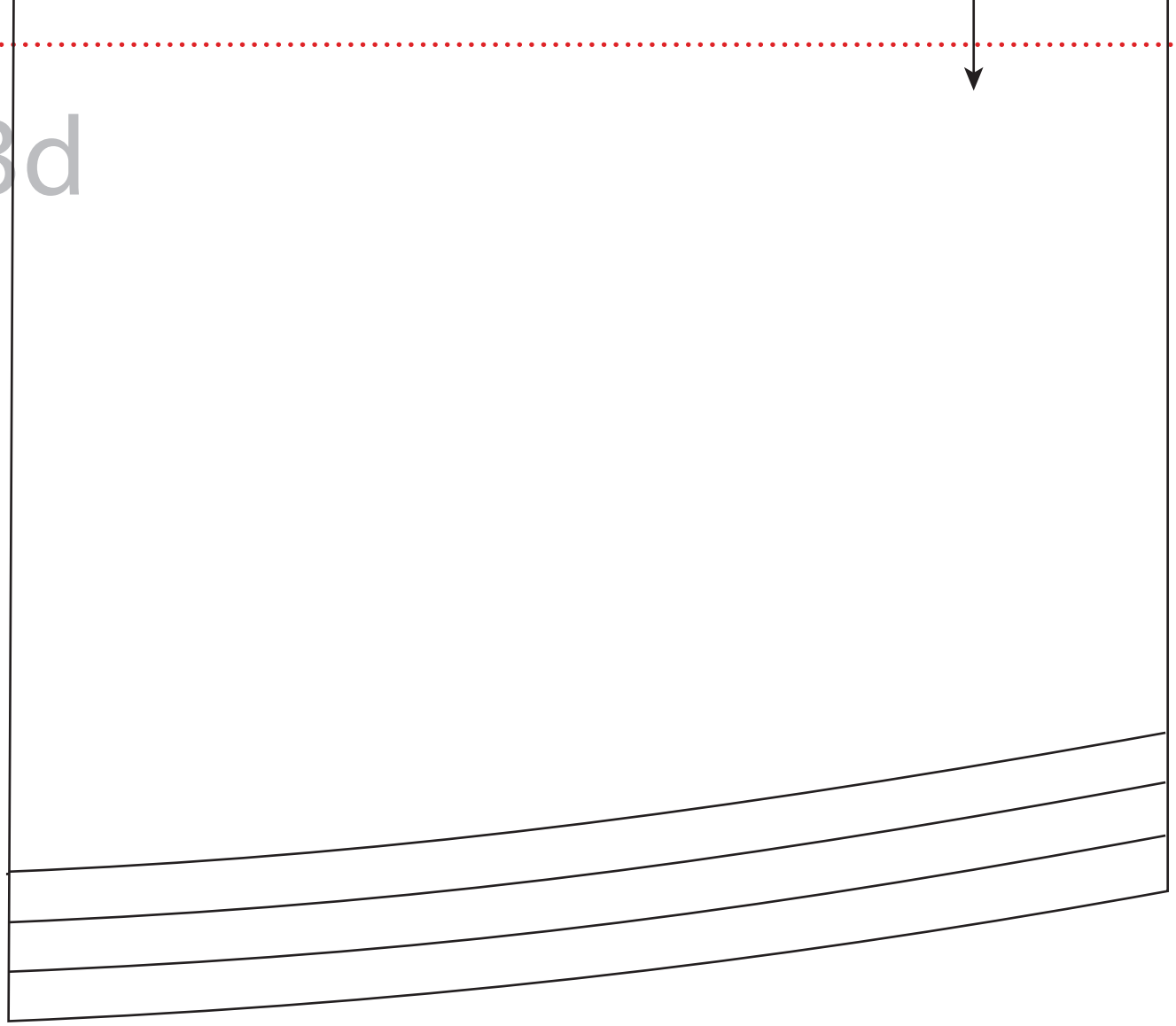
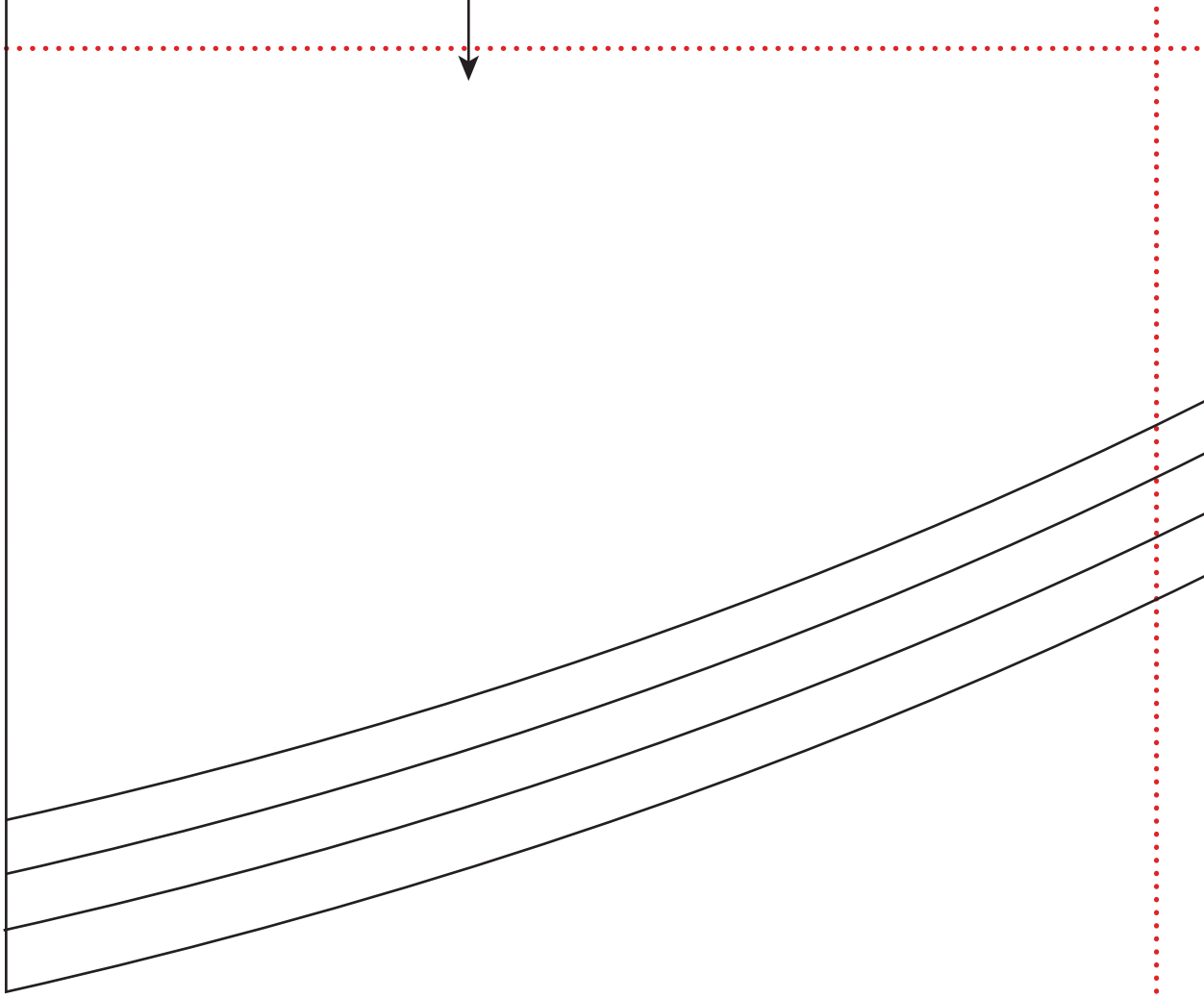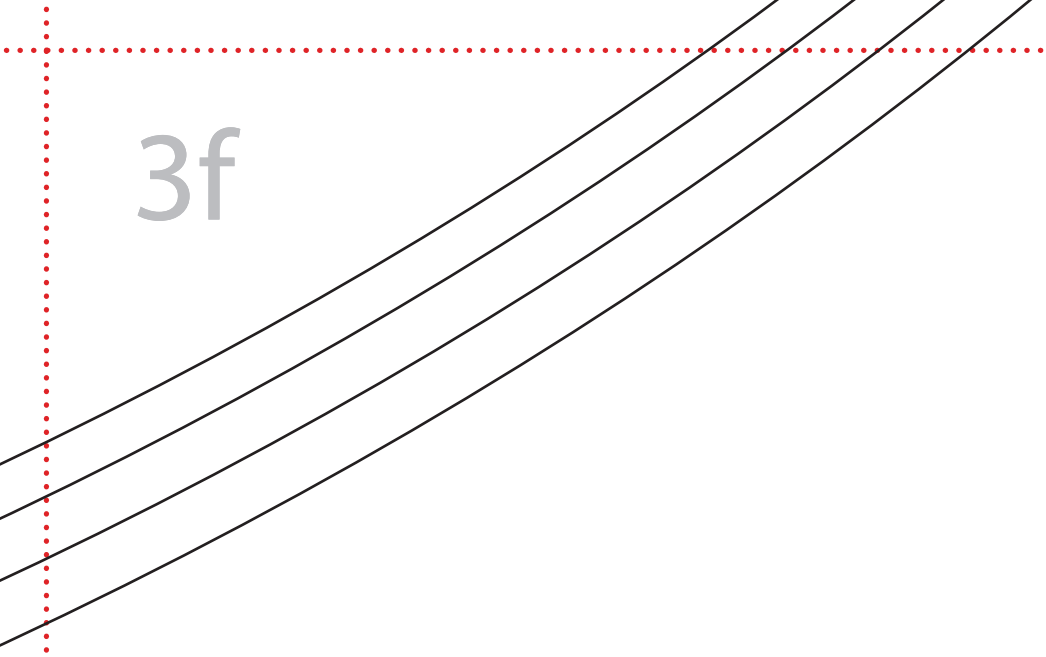
3e